Product	LA31H2450 5500-A33

Specification

Frequency Range	2400MHz～2500MHz/5150 MHz～5850MHz
V.S.W.R	⩽ 2.0
Impedance	50Ω
Gain	2.23dBi/4.05dBi
Azimuth	Omni-directional
Polarization	Linear
Impedance	50 Ω
Azimuth Beam width	Omni-directional

Dimension（mm）

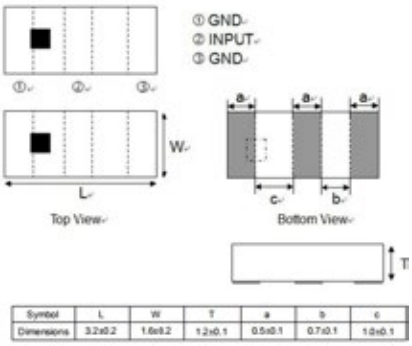

Symbol	L	W	T	a	b	c
Dimensions	3.2±0.2	1.6±0.2	1.2±0.1	0.5±0.1	0.7±0.1	1.0±0.1

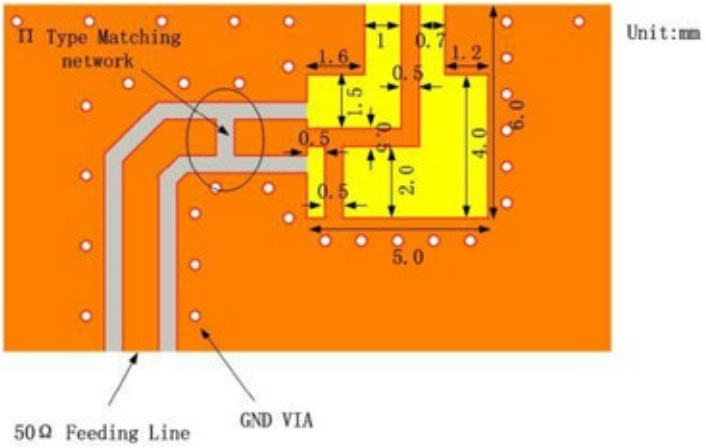

Performance

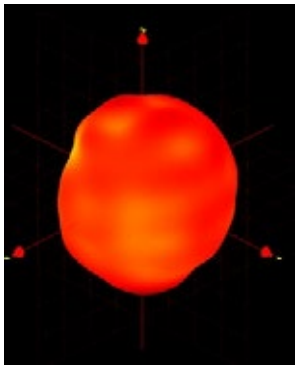

2450MHz

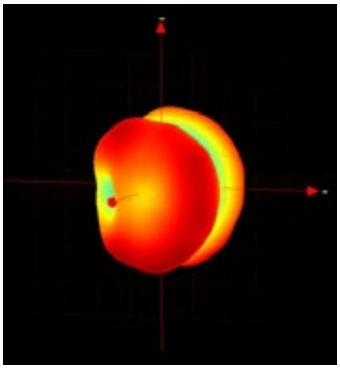

5500MHz

Test Graph